FEMALE END VIEW	MALE END VIEW
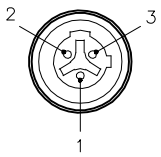	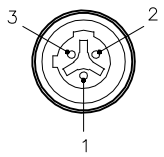
1 = GREEN/YELLOW 2 = RED/BLACK 3 = RED/WHITE	1 = GREEN/YELLOW 2 = RED/BLACK 3 = RED/WHITE

SPECIFICATIONS

CONTACT CARRIER MATERIAL	NYLON OR TPU
MOLDED HEAD MATERIAL/COLOR	TPU/YELLOW
CONTACT MATERIAL/PLATING	BRASS/GOLD
COUPLING NUT MATERIAL/PLATING	BRASS/NICKEL
RATED CURRENT [A]	4.0 A
RATED VOLTAGE [V]	250 V
OUTER JACKET MATERIAL/COLOR	TPU/YELLOW
CONDUCTOR INSULATION MATERIAL	PVC
NUMBER OF CONDUCTORS [AWG]	3x22 AWG
TEMPERATURE RANGE	−40°C to +80°C (−40°F to +176°F)
PROTECTION CLASS	NEMA 1,3,4,6P AND IEC IP67, IP68, IP69K

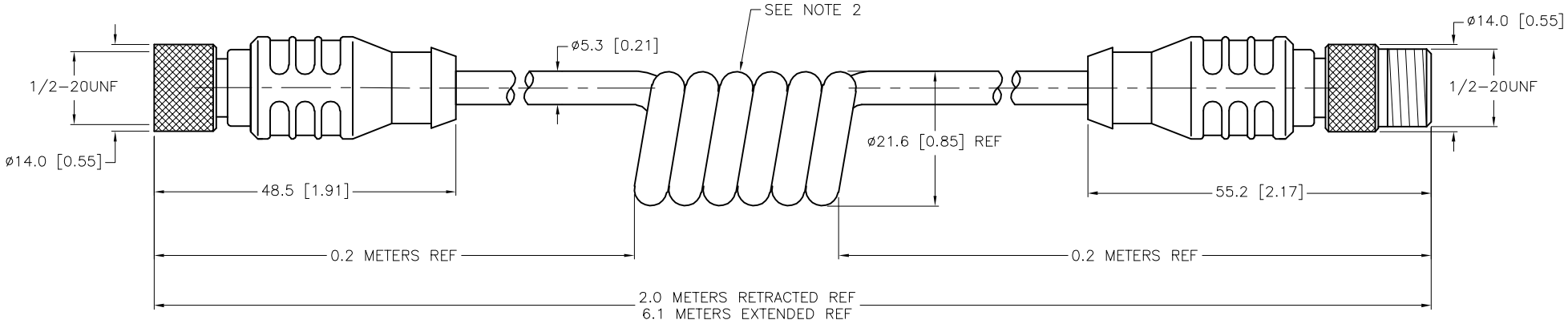

CABLE LENGTH	TOLERANCE *
ALL LENGTHS	+ 4% (OR 50mm) OF LENGTH − 0% (OR 0mm) OF LENGTH WHICHEVER IS GREATER
STRIP LENGTH	**TOLERANCE ***
0−7mm	±0.5mm
8−29mm	±1.0mm
30−49mm	±2.0mm
50−69mm	±3.0mm
70−100mm	±4.0mm
OVER 100mm	±5.0mm
*** UNLESS OTHERWISE SPECIFIED**	

NOTES:

1. "/S90" DESIGNATES THERMOPLASTIC POLYURETHANE (TPU) CABLE JACKET.
2. NUMBER OF COILS IS REFERENCE ONLY.

SOURCE DRAWING - FOR REFERENCE ONLY

REV	DESCRIPTION	BY	DATE	ECO NO.
B	UPDATE GREEN CONDUCTOR TO GREEN/YELLOW	RDS	01/14/19	68225

RELATED DOCUMENTS
1.
2.
3.
4.

3RD ANGLE PROJECTION

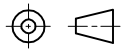

THIS DRAWING IS CONFIDENTIAL AND THE PROPERTY OF TURCK INC. USE OF THIS DOCUMENT WITHOUT WRITTEN PERMISSION IS PROHIBITED.

TURCK

3000 CAMPUS DRIVE
MINNEAPOLIS, MN 55441
1−800−544−7769
(763) 553−7300
(763) 553−0708 fax
www.turck.us

MATERIAL: SEE SPECIFICATIONS

FINISH: SEE SPECIFICATIONS

ALL DIMENSIONS DISPLAYED ON THIS DRAWING ARE FOR REFERENCE ONLY

CONTACT TURCK FOR MORE INFORMATION

DRFT: KMY | DATE: 10/10/13
APVD: E.S. | SCALE: 1=1.0

UNIT OF MEASUREMENT
MILLIMETER [INCH]
DO NOT SCALE THIS DRAWING

DESCRIPTION: KBE 3T−6.1−SBE 3T/S90−SP

IDENTIFICATION NO.: U2−22157 | REV: B

FILE: U2−22157 | SHEET 1 OF 1